UKWH-20011

KWH 4 Streetlight

microVOS TECHNOLOGY

LIGMAN NORTH AMERICA

38w LED
5182 Lumens

IP65
Suitable for wet locations

IK08
Impact Resistant [Vandal Resistant]

Weight 16 lbs

EPA - 0.43

POLE NOT INCLUDED

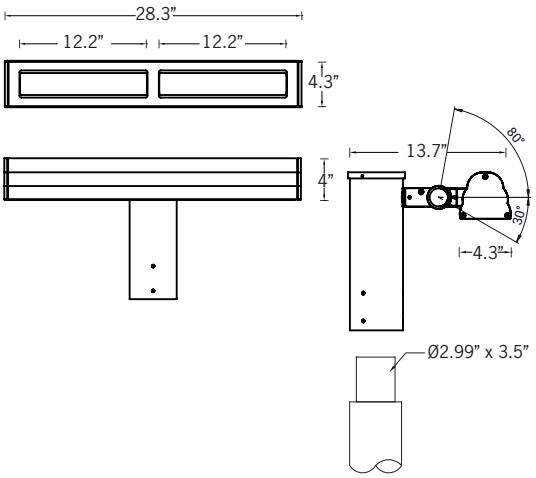

Available with Integral Emergency Backup

microVOS TECHNOLOGY

Ligman’s micro Variable Optical System provides the ability to interchange, mix & rotate optics to provide specific light distributions for optimized spacing and uniformity.

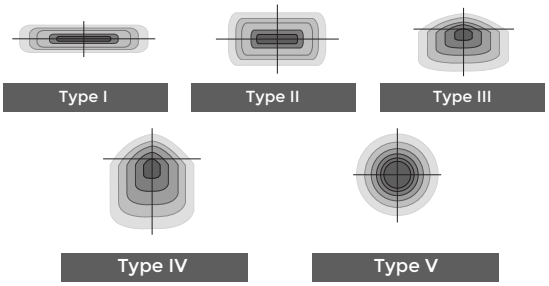

The variable optic system allows for the designer to create hybrid distrubtions for precise lighting requirements.

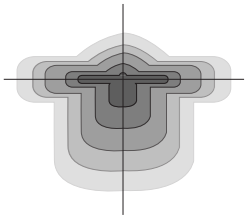

HYBRID
TYPE I & TYPE IV

Construction

Aluminum
Less than 0.1% copper content – Marine Grade 6060 extruded & LM6 Aluminum High Pressure die casting provides excellent mechanical strength , clean detailed product lines and excellent heat dissipation.

Pre paint
8 step degrease and phosphate process that includes deoxidizing and etching as well as a zinc and nickel phosphate process before product painting.

Memory Retentive -Silicon Gasket
Provided with special injection molded “fit for purpose” long life high temperature memory retentive silicon gaskets. Maintains the gaskets exact profile and seal over years of use and compression.

Thermal management
LM6 Aluminum is used for its excellent mechanical strength and thermal dissipation properties in low and high ambient temperatures. The superior thermal heat sink design by Ligman used in conjunction with the driver, controls thermals below critical temperature range to ensure maximum luminous flux output, as well as providing long LED service life and ensuring less than 10% lumen depreciation at 50,000 hours.

Surge Suppression
Standard 10kv surge suppressor provided with all fixtures.

BUG Rating
Contact Factory

Finishing
All Ligman products go through an extensive finishing process that includes fettling to improve paint adherence.

Paint
UV Stabilized 4.9Mil thick powder coat paint and baked at 200 Deg C. This process ensures that Ligman products can withstand harsh environments. Rated for use in natatoriums.

Inspired by Nature Finishes
The Inspired by nature Finishing is a unique system of decorative powder coating. Our metal decoration process can easily transform the appearance of metal or aluminum product into a wood grain finish.

This patented technology enables the simulation of wood grain, and even marble or granite finish through the use of decorative powder coating.

The wood grain finish is so realistic that it’s almost undistinguishable from real wood, even from a close visual inspection. The system of coating permeates the entire thickness of the coat and as a result, the coating cannot be removed by normal rubbing, chipping, or scratching.

The Coating Process
After pre-treatment the prepared parts are powder coated with a specially formulated polyurethane powder. This powder provides protection against wear, abrasion, impact and corrosion and acts as the relief base color for the finalized metal decoration.

The component is then wrapped with a sheet of non-porous film with the selected decoration pattern printed on it using special high temperature inks.

This printed film transfer is vacuum-sealed to the surface for a complete thermo print and then transferred into a customized oven. The oven transforms the ink into different forms within the paint layer before it becomes solid. Finally, the film is removed, and a vivid timber look on aluminum remains.

Wood grain coating can create beautiful wood-looking products of any sort. There are over 300 combinations of designs currently in use. Wood grains can be made with different colors, designs, etc.

Our powder coatings are certified for indoor and outdoor applications and are backed by a comprehensive warranty. These coatings rise to the highest conceivable standard of performance excellence and design innovation.

Added Benefits
- Resistance to salt-acid room, accelerated aging
- Boiling water, lime and condensed water resistant
- Anti-Graffiti, Anti-Slip, Anti-Microbial, Anti-Scratch
- Super durable (UV restant)
- TGIC free (non-toxic)

Hardware
Provided Hardware is Marine grade 316 Stainless steel.

Anti Seize Screw Holes
Tapped holes are infused with a special anti seize compound designed to prevent seizure of threaded connections, due to electrolysis from heat, corrosive atmospheres and moisture.

Crystal Clear Low Iron Glass Lens
Provided with tempered, impact resistant crystal clear low iron glass ensuring no green glass tinge.

Optics & LED
Precise microVOS™ optic design provides exceptional light control and precise distribution of light.
LED CRI > 80

Lumen - Maintenance Life
L80 /B10 at 50,000 hours (This means that at least 90% of the LED still achieve 80% of their original flux)

The KWH luminaire provides a small profile luminaire with clean crisp lines and lateral expandability, maintaining a minimalistic uniform visual sideways appearance to road and pathway users while offering a variety of lumen packages.

These luminaires have rotatable and inter-changeable microVOS optics and are also available with integral emergency battery backup solutions.

This product is also ideal for project perimeter, pathway, parking areas and boundary illumi-nation solutions

Adjustable pole-mounted area light.

Powerful, flexible and cost-effective family with vast array of technical optic choices.

A small size pole mount area light with different optics. The KWH can be aimed to suit specific light patterns with the adjustable arm. Type I, II, III, IV, SCL, ME, as well as Type V symmetrical lens optics suitable for most lighting applications.

Designed for lighting private roadways, car parks, exhibition areas, service stations, truck stops and sports grounds. Color temperature 2700K, 3000K, 3500K and 4000K, LED CRI >80 and life time 50,000 Hours.

Low copper content marine grade corrosion resistant aluminum body. Integral control gear. Stainless steel fasteners in grade 316. Durable memory retentive silicone gasket and clear tempered glass.

The luminaire is treated with a nickel and zinc phosphate protection before powder coating, ensuring high corrosion resistance. This luminaire is provided prewired with power cord to the handhole to simplify contractor installation.

To meet International Dark Sky criteria, 3000k or warmer LEDs must be selected and luminaire fix mounted (+/- 15˚ allowable to permit leveling).

Ligman Lighting USA reserves the right to change specifications without prior notice, please contact factory for latest information. Due to the continual improvements in LED technology data and components may change without notice.

UKWH-20011

KWH 4 Streetlight

microVos TECHNOLOGY

LIGMAN NORTH AMERICA

PROJECT		DATE	

QUANTITY		TYPE		NOTE	

ORDERING EXAMPLE || UKWH - 20011 - 38w - T2 - W30 - 02 - 120/277v - Options

UKWH-20011					
	LAMP	BEAM	LED COLOR	FINISH COLOR	VOLTAGE
	38w LED 5182 Lumens	T1 - Type I Distribution T2 - Type II Distribution T3 - Type III Distribution T4 - Type IV Distribution M - Medium 31˚ W - Wide 55˚ EW - Extra Wide 107˚ ME - Type ME Distribution SCL - Type SCL Distribution	W27 - 2700K W30 - 3000K W35 - 3500K W40 - 4000K	01 - BLACK RAL 9011 02 - DARK GREY RAL 7043 03 - WHITE RAL 9003 04 - METALLIC SILVER RAL 9006 05 - MATTE SILVER RAL 9006 06 - LIGMAN BRONZE 07 - CUSTOM RAL	120/277v Other - Specify

INSPIRED BY NATURE FINISHES

- SW01 - OAK FINISH
- SW02 - WALNUT FINISH
- SW03- PINE FINISH
- DF - DOUGLAS FIR FINISH
- CW - CHERRY WOOD FINISH
- NW - NATIONAL WALNUT FINISH
- SU01 - CONCRETE FINISH
- SU02 - SOFTSCAPE FINISH
- SU03 - STONE FINISH
- SU04 - CORTEN FINISH

THERE IS AN ADDITIONAL COST FOR THESE FINISHES

ADDITIONAL OPTIONS

DIM - 0-10v Dimming
NAT - Natatorium Rated
F - Frosted Lens
EMG - Emergency Battery Backup
VIS - Visor
IHSS- Internal House Side Shield
OS - FSP Occupancy Sensor [See last page]
FSIR - Occupancy Sensor Remote Programmer [See last page]

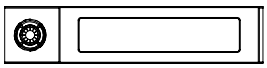

OS
Occupancy Sensor

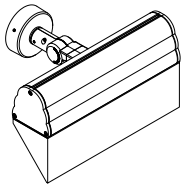

VIS
Visor

Example: Inspired by Nature Finish

More Custom Finishes Available Upon Request

Consult factory for pricing and lead times

Oak, Cherry, Beech, Carbon
Walnut, Chestnut, Bamboo, Galvanized
Pine, Mahogany, Birch, Steel

Ligman Lighting USA reserves the right to change specifications without prior notice, please contact factory for latest information. Due to the continual improvements in LED technology data and components may change without notice.

Intertek

KWH Product Family

KWH 1

- UKWH-30001-19w-2591lm
- UKWH-30001-48w RGBW-2513lm

KWH 2

- UKWH-30011-31w-5182lm
- UKWH-30011-73w RGBW-4136lm

KWH 3

- UKWH-30021-60w-7778lm
- UKWH-30021-90w RGBW-5593lm

KWH 4

- UKWH-20001-20w-2591lm

KWH 5

- UKWH-20011-38w-5182lm

KWH 6

- UKWH-20021-60w-7200lm

KWH 7

- UKWH-50001-54w-5643lm
- UKWH-50002-48w RGBW-2719lm
- UKWH-50003-45w RGBWTW-2946lm

KWH 8

- UKWH-50011-105w-11391lm
- UKWH-50012-92w RGBW-5438lm
- UKWH-50013-92w RGBWTW-5892lm

KWH 9

- UKWH-50021-78w-8543lm
- UKWH-50022-70w RGBW-4078lm
- UKWH-50023-70w RGBWTW-4419lm

KWH 10

- UKWH-50031-152w-17087lm
- UKWH-50032-136w RGBW-8157lm
- UKWH-50033-136w RGBWTW-8837lm

KWH 11

- UKWH-50041-103w-11391lm
- UKWH-50042-93w RGBW-5438lm
- UKWH-50043-93w RGBWTW-5892lm

KWH 12

- UKWH-50051-202w-22783lm
- UKWH-50052-182w RGBW-10876lm
- UKWH-50053-182w RGBWTW-11783lm

HIGH/LOW/OFF PIR OUTDOOR PHOTO/MOTION SENSOR IP66 - legrand® Integrated photocell

LIGMAN NORTH AMERICA

Ligman provides integrated photocell control using the wattstopper legrand FSP-221B. These units are installed inside the fixture housing with only the external lenses being visible

FSP-221B

Models

FSP-221B, 100-347 VAC

Specifications and Features

Three interchangeable lenses for mounting between 8' and 40'

Remote setup and adjustment with handheld wireless configuration tool

Adjustable high and low modes (high: 0 to 10V, low: off, 0 to 9.8V)

Adjustable time delay (30 seconds, 1 to 30 minutes)

Adjustable cut off delay (none, 1 to 59 minutes, 1 to 5 hours)

Adjustable sensitivity/service mode (low, med, max; on-fix, off-fix)

Adjustable setpoints: hold off setpoint (none, 1 to 250 fc, auto); photocell on/off setpoint (1 to 250 fc)

Adjustable ramp and fade times (1 to 60 seconds)

Operating temperature: -40°F to +167°F (-40°C to +75°C)

IP66 rated

Five year warranty

Factory Defaults

High mode:	10V
Low mode:	1V
Time delay:	5 minutes
Cut off:	1 hour
Setpoint:	Disabled
Sensitivity:	Max
Ramp up time:	Disabled
Fade down time:	Disabled
Photocell On/Off:	Disabled

Dimensions of Lens Options

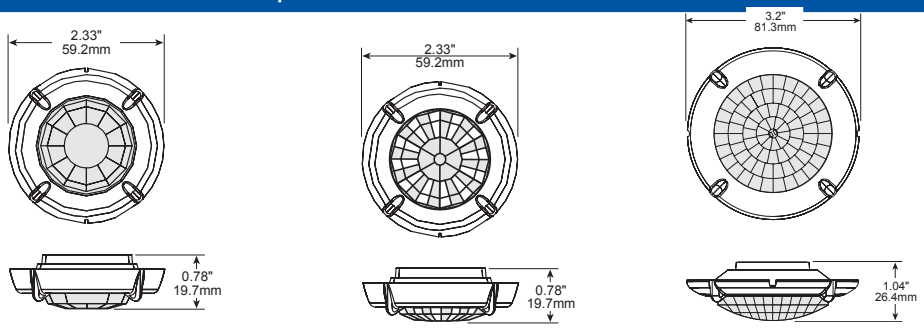

FSP-L2 dimensions

FSP-L3 dimensions

FSP-L7 dimensions

Product Overview

The FSP-221B is a family of passive infrared (PIR) outdoor sensors that raise or lower the electric lighting level to high, low or off based on motion and/or daylight contribution. Typically, once the sensor stops detecting movement and the time delay elapses, lights will first fade to low mode, and eventually switch off. When motion is detected, the sensor ramps the light level to high mode unless the daylight contribution is sufficient.

The integral photocell can also switch the lights on and off for dusk to dawn control, so that lighting remains on overnight even without motion detection.

The sensors control 0-10VDC or nondimming LED drivers or ballasts.

The low voltage FSP-201B may be used with dim-to-off drivers or ballasts.

Initial setup and subsequent sensor adjustments are made using a Wireless Handheld Configuration Tool (FSIR-100). This tool enables adjustment of sensor parameters including high/low mode, sensitivity, time delay, cut off and more.

The FSIR-100 can read current parameter settings, and stores up to six sensor parameter profiles to speed commissioning of multiple sensors.

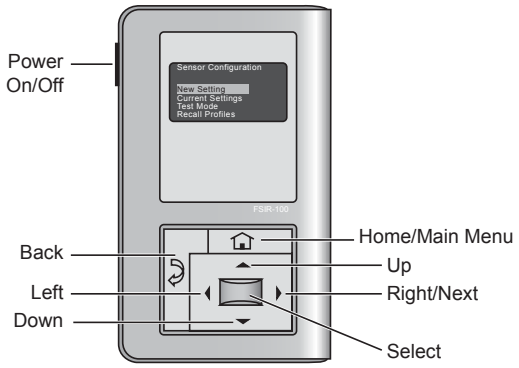

The **FSIR-100** is a convenient handheld remote tool for sensor setting. Adjustable settings can be changed as needed for specific applications.

Coverage

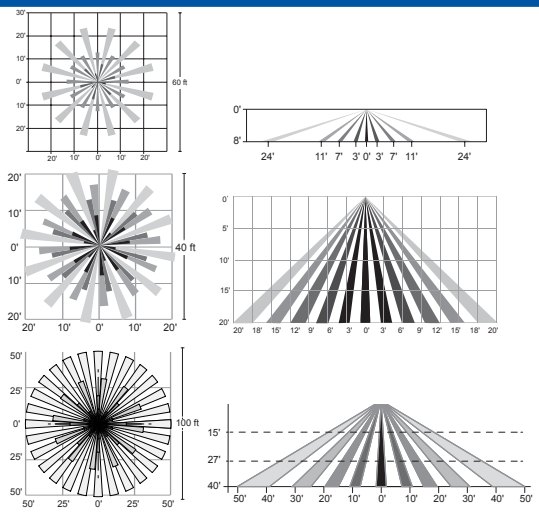

FSP-L2 top and side coverage patterns

FSP-L3 top and side coverage patterns

FSP-L7 top and side coverage patterns

Catalog #	Color	Description
FSP-L2	White/Grey/Black/Brown The Trim color option will be selected to closest match fixture color. e.g [Matte silver fixture - grey trim]	360° lens, maximum coverage 48' diameter from 8' height
FSP-L3	White/Grey/Black/Brown The Trim color option will be selected to closest match fixture color. e.g [Matte silver fixture - grey trim]	360° lens, maximum coverage 40' diameter from 20' height
FSP-L7	White/Grey/Black/Brown The Trim color option will be selected to closest match fixture color. e.g [Matte silver fixture - grey trim]	360° lens, maximum coverage 100' diameter from 40' height
FSIR-100	Black	Remote Handheld Configuration Tool