USA-31501

Sandy 4 Large Surface

LIGMAN NORTH AMERICA

20w LED 920 Lumens
IP65 • Suitable For Wet Locations
IK08 • Impact Resistant (Vandal Resistant)
Weight 5 lbs

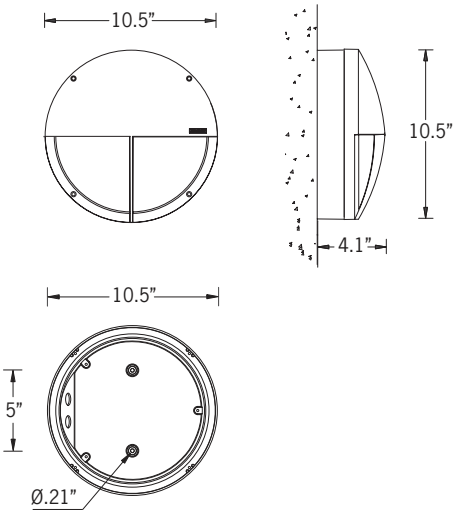

Mounting Detail

Additional Options (Consult Factory For Pricing)

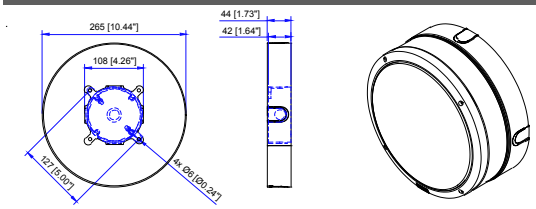

SCBT
Surface Conduit Box Trim

NOTE: This trim covers a shallow single gang, surface mount junction box [Provided by contractor]
Example: Hubbell: - 5361-0 - 1-Gang Weatherproof Box, Five 1/2” in. Threaded Outlets - or - 5372-0 - 1-Gang Weatherproof Box, Five 3/4 in. Threaded Outlets

Construction

Aluminum
Less than 0.1% copper content – Marine Grade 6060 extruded & LM6 Aluminum High Pressure die casting provides excellent mechanical strength , clean detailed product lines and excellent heat dissipation.

Pre paint
8 step degrease and phosphate process that includes deoxidizing and etching as well as a zinc and nickel phosphate process before product painting.

Memory Retentive -Silicon Gasket
Provided with special injection molded “fit for purpose” long life high temperature memory retentive silicon gaskets. Maintains the gaskets exact profile and seal over years of use and compression.

Thermal management
LM6 Aluminum is used for its excellent mechanical strength and thermal dissipation properties in low and high ambient temperatures. The superior thermal heat sink design by Ligman used in conjunction with the driver, controls thermals below critical temperature range to ensure maximum luminous flux output, as well as providing long LED service life and ensuring less than 10% lumen depreciation at 50,000 hours.

Surge Suppression
Standard 10kv surge suppressor provided with all fixtures.

BUG Rating
B0 - U3 - G1

Finishing
All Ligman products go through an extensive finishing process that includes fettling to improve paint adherence.

Paint
UV Stabilized 4.9Mil thick powder coat paint and baked at 200 Deg C. This process ensures that Ligman products can withstand harsh environments. Rated for use in natatoriums.

Inspired by Nature Finishes
The Inspired by nature Finishing is a unique system of decorative powder coating. Our metal decoration process can easily transform the appearance of metal or aluminum product into a wood grain finish.

This patented technology enables the simulation of wood grain, and even marble or granite finish through the use of decorative powder coating.

The wood grain finish is so realistic that it’s almost undistinguishable from real wood, even from a close visual inspection. The system of coating permeates the entire thickness of the coat and as a result, the coating cannot be removed by normal rubbing, chipping, or scratching.

The Coating Process
After pre-treatment the prepared parts are powder coated with a specially formulated polyurethane powder. This powder provides protection against wear, abrasion, impact and corrosion and acts as the relief base color for the finalized metal decoration.

The component is then wrapped with a sheet of non-porous film with the selected decoration pattern printed on it using special high temperature inks.

This printed film transfer is vacuum-sealed to the surface for a complete thermo print and then transferred into a customized oven. The oven transforms the ink into different forms within the paint layer before it becomes solid. Finally, the film is removed, and a vivid timber look on aluminum remains.

Wood grain coating can create beautiful wood-looking products of any sort. There are over 300 combinations of designs currently in use. Wood grains can be made with different colors, designs, etc.

Our powder coatings are certified for indoor and outdoor applications and are backed by a comprehensive warranty. These coatings rise to the highest conceivable standard of performance excellence and design innovation.

Added Benefits
- Resistance to salt-acid room, accelerated aging
- Boiling water, lime and condensed water resistant
- Anti-Graffiti, Anti-Slip, Anti-Microbial, Anti-Scratch
- Super durable (UV resistant)
- TGIC free (non-toxic)

Hardware
Provided Hardware is Marine grade 316 Stainless steel.

Anti Seize Screw Holes
Tapped holes are infused with a special anti seize compound designed to prevent seizure of threaded connections, due to electrolysis from heat, corrosive atmospheres and moisture.

High Impact UV Stabilized Polycarbonate Lens
Manufactured with Ultra High Impact, UV Stabilized Injection Molded Polycarbonate.

Optics & LED
Precise optic design provides exceptional light control and precise distribution of light.
LED CRI > 80

Lumen - Maintenance Life
L80 /B10 at 50,000 hours (This means that at least 90% of the LED still achieve 80% of their original flux)

Shielded, circular wall-mounted bulkhead range. Traditional circular exterior family with many attractive grill and shield options.

A range of small and large circular wall mounted bulkheads with a vandal resistant UV stabilized polycarbonate diffuser. Ideal for numerous indoor or outdoor applications.

Sandy has a subtle chamfered frame and it can be given a more striking appearance by way of different grill and visor options.

As with all wall mounted luminaires, these fixtures are provided with a special self-healing waterproof cable gland that prevents water entering the fixture after wiring.

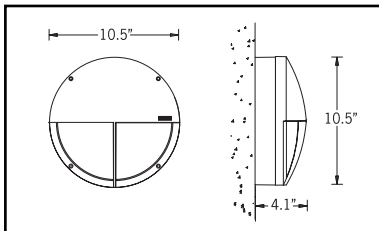

Sandy
****Motion Sensor – Microwave 1-10v****
Adjustable Sensor (10 Seconds – 15 Minutes)
150° Sensitivity
Sensor Detection Area:
USA-31471-1MS, USA-31521-1MS,
USA-31532-1MS (8.8ft-22.3ft)
USA-31481-1MS. USA-31542-1MS
(9.8ft-22.9ft)
USA-31491-1MS, USA-31501-1MS,
USA-31552-1MS, USA-31562-1MS
(9.8ft-21.3ft)

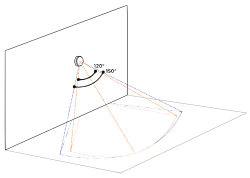

****Motion Sensor – Microwave On/Off****
Adjustable Sensor (5 Seconds – 30 Minutes)
120° Sensitivity
Sensor Detection Area:
USA-31471-1MS, USA-31521-1MS,
USA-31532-1MS (8.8ft-22.3ft)
USA-31481-1MS. USA-31542-1MS
(9.8ft-22.9ft)
USA-31491-1MS, USA-31501-1MS,
USA-31552-1MS, USA-31562-1MS
(9.8ft-21.3ft)

Ligman Lighting USA reserves the right to change specifications without prior notice, please contact factory for latest information. Due to the continual improvements in LED technology data and components may change without notice.

USA-31501

Sandy 4 Large Surface

LIGMAN NORTH AMERICA

PROJECT		DATE	

QUANTITY		TYPE		NOTE	

ORDERING EXAMPLE || USA - 31501 - 20w - W30 - 02 - 120/277v - Options

USA-31501

LAMP	LED COLOR	FINISH COLOR	VOLTAGE
20w LED 920 Lumens	W27 - 2700K W30 - 3000K W35 - 3500K W40 - 4000K	01 - BLACK RAL 9011 02 - DARK GREY RAL 7043 03 - WHITE RAL 9003 04 - METALLIC SILVER RAL 9006 05 - MATTE SILVER RAL 9006 06 - LIGMAN BRONZE 07 - CUSTOM RAL	120/277v Other - Specify

INSPIRED BY NATURE FINISHES

SW01 - OAK FINISH
SW02 - WALNUT FINISH
SW03- PINE FINISH
DF - DOUGLAS FIR FINISH
CW - CHERRY WOOD FINISH
NW - NATIONAL WALNUT FINISH
SU01 - CONCRETE FINISH
SU02 - SOFTSCAPE FINISH
SU03 - STONE FINISH
SU04 - CORTEN FINISH

THERE IS AN ADDITIONAL COST FOR THESE FINISHES

ADDITIONAL OPTIONS

NAT - Natatorium Rated
DIM - 0-10v Dimming
SCBT - Surface Conduit Entry Box
1MS - Integrated Microwave Motion Sensor

More Custom Finishes Available Upon Request

Consult factory for pricing and lead times

Oak, Cherry, Beech, Carbon
Walnut, Chestnut, Bamboo, Galvanized
Pine, Mahogany, Birch, Steel

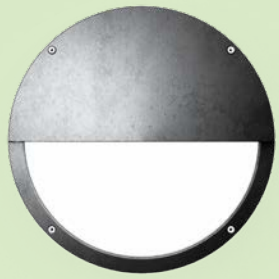

Example: Inspired by Nature Finish

Ligman Lighting USA reserves the right to change specifications without prior notice, please contact factory for latest information. Due to the continual improvements in LED technology data and components may change without notice.

Intertek

Sandy Product Family

Sandy 1

- USA-31471-20w-1670lm

Sandy 2

- USA-31481-20w-1800lm

Sandy 3

- USA-31491-20w-949lm

Sandy 4

- USA-31501-20w-920lm

Sandy 6

- USA-31521-20w-1686lm

Sandy 7

- USA-31531-27w-2284lm

Sandy 8

- USA-31541-27w-2478lm

Sandy 9

- USA-31551-27w-1315lm

Sandy 10

- USA-31561-27w-1275lm