UOD-50083

Odessa 2 Medium Pedestal Floodlight

LIGMAN NORTH AMERICA

43w COB 4,343lm
IP66 • Suitable For Wet Locations
IK08 • Impact Resistant (Vandal Resistant)
Weight 7.5 lbs

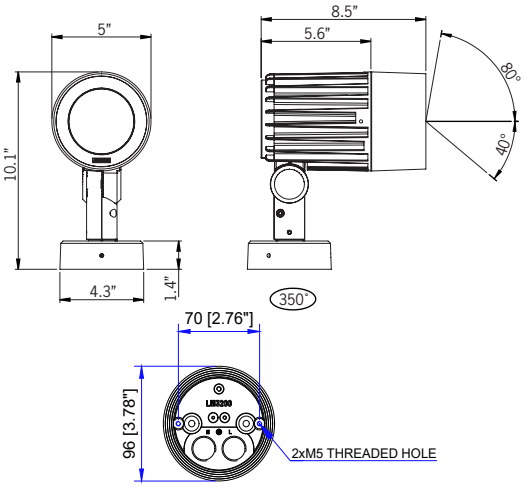

MOUNTING DETAIL

Construction

Aluminum
Less than 0.1% copper content – Marine Grade 6060 extruded & LM6 Aluminum High Pressure die casting provides excellent mechanical strength , clean detailed product lines and excellent heat dissipation.

Pre paint
8 step degrease and phosphate process that includes deoxidizing and etching as well as a zinc and nickel phosphate process before product painting.

Memory Retentive -Silicon Gasket
Provided with special injection molded "fit for purpose" long life high temperature memory retentive silicon gaskets. Maintains the gaskets exact profile and seal over years of use and compression.

Thermal management
LM6 Aluminum is used for its excellent mechanical strength and thermal dissipation properties in low and high ambient temperatures. The superior thermal heat sink design by Ligman used in conjunction with the driver, controls thermals below critical temperature range to ensure maximum luminous flux output, as well as providing long LED service life and ensuring less than 10% lumen depreciation at 50,000 hours.

Surge Suppression
Standard 10kv surge suppressor provided with all fixtures.

BUG Rating
B2- U0 - G0

Finishing
All Ligman products go through an extensive finishing process that includes fettling to improve paint adherence.

Paint
UV Stabilized 4.9Mil thick powder coat paint and baked at 200 Deg C. This process ensures that Ligman products can withstand harsh environments. Rated for use in natatoriums.

MicroPRIM Finishes

MicroPRIM is Ligman's trade marked decorative powder coating technology that permanently infuses colors, patterns, or imagery directly into the surface of luminaires and poles while providing protections that standard powder coating does not offer.

MicroPRIM finishes include nature-inspired wood grains and stone aesthetics, material-inspired finishes such as brushed metal, concrete, and carbon fiber, Solid colors in Ligman standard colors, as well as any RAL or Pantone color, Decorative patterns, custom imagery and more.

Coating and Infusion Process

Metal components are pre-treated and powder coated with a proprietary polyurethane-based coating engineered for outdoor architectural use. Decorative patterns or imagery are then permanently infused into the cured powder coat through a heat-based process, creating a durable, integrated finish.

Performance and Validation

MicroPRIM finishes are suitable for indoor and outdoor applications and meet AAMA2605 architectural coating requirements. Performance is validated through laboratory and real-world testing to ASTM standards for UV exposure, adhesion, abrasion, impact, salt spray, chemical resistance, and graffiti resistance.

All MicroPRIM finishes are backed by Ligman's 10-year warranty.

Key Performance Attributes
•Anti-graffiti resistance
•UV and weather resistance
•Scratch and abrasion resistance
•Natatorium Rated for installation in corrosive environments

Hardware
Provided Hardware is Marine grade 316 Stainless steel.

Anti Seize Screw Holes
Tapped holes are infused with a special anti seize compound designed to prevent seizure of threaded connections, due to electrolysis from heat, corrosive atmospheres and moisture.

High Impact Acrylic Lens
Manufactured with Ultra High Impact, Naturally UV Stabilized Injection Molded Acrylic.

Optics & LED
Precise optic design provides exceptional light control and precise distribution of light.
LED CRI > 80

Lumen - Maintenance Life
L80 /B10 at 50,000 hours (This means that at least 90% of the LED still achieve 80% of their original flux)

Stylish adjustable projector range.
Naturally beautiful and unique contemporary family, Odessa packs a punch with an abundance of options and accessories.

The **Odessa family of floodlights** features a modern, streamlined aesthetic and provides an ideal lighting solution for small to medium scale spotlighting and floodlighting applications. These luminaires can be precisely aimed and securely locked in position to highlight architectural elements, landscape features, or to enhance safety and visibility in darker areas such as campuses and parks.

This range of high performance floodlights delivers a robust and durable design suitable for demanding environments, including recreational facilities, public spaces, and architectural projects. The luminaire incorporates integrated heat sinks to optimize LED thermal management and includes an integral driver for ease of installation.

Odessa is available in **Narrow, Medium, Wide, and Very Wide** light distributions, with color temperature options of **2700K, 3000K, 3500K, and 4000K.** A variety of optional accessories can be specified, including ground spikes, visors, louvres, and linear spread lenses.

For non standard fixture variations or specific reflector requirements, please contact the factory.
Three mounting options are available: **yoke mount, pedestal mount, and a ½" threaded knuckle system**, which includes a fully rotatable head with a locking screw for precise after installation aiming.

Additional Options (Consult Factory For Pricing)

A80131
Anti Glare Visor

A80114
Linear Spread

A80231
Anti Glare Louvre

S20LGS
Large Ground Spike 20"

A50181
24" Arm Pedestal

Ligman North America reserves the right to change specifications without prior notice, please contact factory for latest information. Due to the continual improvements in LED technology data and components may change without notice.

UOD-50083

Odessa 2 Medium Pedestal Floodlight

LIGMAN NORTH AMERICA

PROJECT		DATE	

QUANTITY		TYPE		NOTE	

ORDERING EXAMPLE || UOD-50083 - 43w - N - W30 - 03 - 120/277v

UOD-50083	LAMP	BEAM	LED COLOR	FINISH COLOR	VOLTAGE
	43w COB 4,343 Lumens	N - Narrow 15˚ M - Medium 24˚ W - Wide 47˚ VW - Very Wide 66˚	W27 - 2700K W30 - 3000K W35 - 3500K W40 - 4000K	01 - BLACK RAL 9011 02 - DARK GREY RAL 7043 03 - WHITE RAL 9003 04 - METALLIC SILVER RAL 9006 05 - MATTE SILVER RAL 9006 06 - LIGMAN BRONZE 07 - CUSTOM RAL	120/277v

ADDITIONAL OPTIONS

DIM - 0-10v Dimming
NAT - Natatorium Rated
A80131 - Anti Glare Visor
A80114 - Linear Spread Lens
A80231 - Anti Glare Louvre
A80231 - Anti Glare Louvre
S20LGS - Large Ground Spike 20”
A50181 - Surface Pedestal 24” Extended Arm

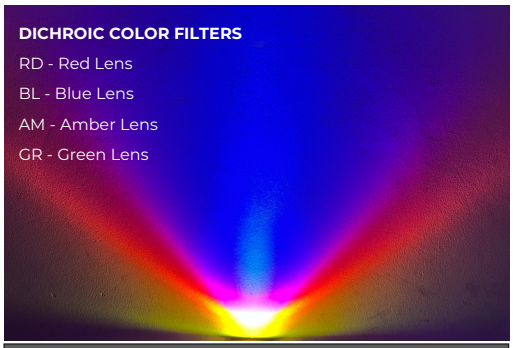

Example of Blue Dichroic Color Filter

More Custom Finishes Available Upon Request

Consult factory for pricing and lead times

MicroPRIM FINISHES

- SW01 - OAK FINISH
- SW02 - WALNUT FINISH
- SW03- PINE FINISH
- DF - DOUGLAS FIR FINISH
- CW - CHERRY WOOD FINISH
- NW - NATIONAL WALNUT FINISH
- SU01 - CONCRETE FINISH
- SU02 - SOFTSCAPE FINISH
- SU03 - STONE FINISH
- SU04 - CORTEN FINISH
- CSM - Custom Image/Pattern

MicroPRIM FINISHES

- MP - MAPLE FINISH
- MHG - MAHOGANY FINISH
- BH - BEECH FINISH
- CN - CHESTNUT FINISH
- WMBL - WHITE MARBLE FINISH
- MBL - MARBLE FINISH
- GRNT - GRANITE FINISH
- BGD - BRUSHED GOLD FINISH
- BBRZ - BRUSHED BRONZE FINISH
- CAMO - CAMOUFLAGE FINISH

- MP01 - MicroPRIM RAL 9011 Black (Glossy)
- MP02 - MicroPRIM RAL 7043 Dark Grey (Glossy)
- MP03 - MicroPRIM RAL 9003 White (Glossy)
- MP04 - MicroPRIM RAL 9006 Metallic Silver (Glossy)
- MP05 - MicroPRIM RAL 9006 Matte Silver (Matte/Textured)
- MP06 - MicroPRIM Ligman Bronze (Glossy)
- MP07 - MicroPRIM Custom Color (Glossy)

MicroPRIM Finish

Ligman North America reserves the right to change specifications without prior notice, please contact factory for latest information. Due to the continual improvements in LED technology data and components may change without notice.

Intertek